N O T I C E

NO HAND CARRIED BIDS!
NO MAILED BIDS!

Current security requirements established by the U.S. Capitol Police to screen mail being delivered to the U.S. Capitol Complex of buildings preclude the use of U.S. Postal Service by offerors to deliver their proposals submitted in response to this solicitation. In addition, because all packages must be screened for security purposes at a central location prior to their delivery, the Architect of the Capitol cannot accept packages containing offers handcarried directly to the Bid Room address within the Ford House Office Building, as specified elsewhere in this solicitation, or at any other location in the U.S. Capitol Complex of buildings.

Due to these unusual circumstances the Procurement Division for the Architect of the Capitol will only accept offers/proposals via UPS or FEDEX at the address noted below. All handcarried offers/proposals will be rejected. Any attempt to hand carry an offer/proposal to any location in the U.S. Capitol Complex of buildings will be refused. See Section L of the solicitation for submission of offers.(Service/Supply). Offerors are advised when sending proposals via FEDEX or UPS ***not*** to use same day delivery. FEDEX/UPS often subcontract out the delivery for same-day service. It is necessary for delivery personnel to arrive in a FEDEX/UPS truck and be in a uniform recognized as FEDEX/UPS at the delivery point. Offerors are encouraged to determine who will be making the delivery when making arrangements with FEDEX/UPS.

All UPS and FEDEX deliveries are to be made to the Ford House Office Building at the following address:

Architect of the Capitol
Procurement Division
Ford House Office Building
Attn: Mrs. Shola Matthews-Aroloye,
Contract Specialist
Room H2-263
Second and "D" Streets, S.W.
Washington, DC 20515

NOTICE TO CONTRACTORS

The Architect of the Capitol anticipates that in 2006 the agency's contractors will have to register with the Central Contractor Registration (CCR) database. This is the primary vendor database for the U.S. Federal Government and the CCR collects, validates, stores, and disseminates data in support of agency acquisition missions.

Registration in the CCR will become mandatory in order to be awarded contracts by the Federal Government. Vendors are required to complete a one-time registration to provide basic information relevant to procurement and financial transactions. Vendors must update or renew their registration at least once per year to maintain an active status.

CCR validates the vendor information and electronically shares the secure and encrypted data with the federal agencies finance offices to facilitate paperless payments through electronic funds transfer (EFT).

The AOC is now encouraging all vendors to register with the CCR if they are not already registered. Vendors can register on line at http://www.ccr.gov. This internet site contains all pertinent information for registration as well as provides contact points for help when registering.

SOLICITATION, OFFER, AND AWARD Architect of the Capitol	1. REQUISITION NO. CB 080037	2. PROJECT NO.

3. CONTRACT NUMBER	4. SOLICITATION NUMBER	5. TYPE OF SOLICITATION	6. TITLE: Custom Crowd Control Barriers
	RFP080011	☐ SEALED BID (IFB) ☒ NEGOTIATED (RFP)	7. DATE ISSUED: 03/01/2008

8. ISSUED BY	9. ADDRESS OFFER TO (If other than Item 8)
AOC - Procurement Division 2nd & D Streets, SW Room H2-263 WASHINGTON, DC 20515	AOC - Procurement Division 2nd & D Streets, SW Room H2-263 WASHINGTON, DC 20515

NOTE: In sealed bid solicitations "offer" and "offeror" mean "bid" and "bidder".

SOLICITATION

10. Sealed offers in original and _____02_____ copies for furnishing the supplies or services in the Schedule will be received at the place specified in item 9 on 03/31/2008 at 1:00 PM (local time).

CAUTION - LATE Submissions, Modifications, and Withdrawals: All offers are subject to all terms and conditions contained in this solicitation.

11. FOR INFORMATION CALL: Shola Matthews-Aroloye TELEPHONE NO.(NO COLLECT CALLS) 202-226-0641

12. TABLE OF CONTENTS

(X)	SEC.	DESCRIPTION	PAGE(S)	(X)	SEC.	DESCRIPTION	PAGE(S)
		PART I - SCHEDULE				PART II - CONTRACT CLAUSES	
X	A	SOLICITATION/CONTRACT FORM	1	X	I	CONTRACT CLAUSES	11-22
X	B	SUPPLIES OR SERVICES AND PRICES/COSTS	2			PART III - LIST OF DOCUMENTS, EXHIBITS AND OTHER ATTACH	
X	C	DESCRIPTION/SPECS./WORK STATEMENT	3	X	J	LIST OF ATTACHMENTS	23
X	D	PACKAGING AND MARKING	4			PART IV - REPRESENTATIONS AND INSTRUCTIONS	
X	E	INSPECTION AND ACCEPTANCE	5	X	K	REPRESENTATIONS CERTIFICATIONS AND OTHER STATEMENTS OF OFFERORS	24-29
X	F	DELIVERIES OR PERFORMANCE	6-7	X	L	INSTRS., CONDS., AND NOTICES TO OFFERORS	30-33
X	G	CONTRACT ADMINISTRATION DATA	8-9	X	M	EVALUATION FACTORS FOR AWARD	34
	H	SPECIAL CONTRACT REQUIREMENTS					

OFFER (Must be fully completed by offeror)

NOTE: Item 13 does not apply if the solicitation includes the provisionstitled Minimum Bid Acceptance Period.

13. In compliance with the above, the undersigned agrees, if this offer is accepted within _____ CALENDAR days *(60 CALENDAR days unless a different period is inserted by the offeror)* from the date for receipt of offers specified above, to furnish any or all items upon which prices are offered at the price set opposite each item, delivered at the designated point(s), within the time specified in the schedule.

14. DISCOUNT FOR PROMPT PAYMENT	10 CALENDAR DAYS(%)	20 CALENDAR DAYS(%)	30 CALENDAR DAYS(%)	CALENDAR DAYS(%)

15. ACKNOWLEDGEMENT OF AMENDMENTS *(The offeror acknowledges receipt of amendments to the SOLICITATION for offerors and related documents numbered and dated):*	AMENDMENT NO.	DATE	AMENDMENT NO.	DATE

16A. NAME AND ADDRESS OF OFFEROR	CODE	17. NAME AND TITLE OF PERSON AUTHORIZED TO SIGN OFFER *(Type or Print)*
,		

16B. TELEPHONE NUMBER			16C. CHECK IF REMITTANCE ADDRESS IS DIFFERENT FROM ABOVE - ENTER SUCH ADDRESS IN	18. SIGNATURE	19. OFFER DATE
AREA CODE	NUMBER	EXT.	☐		

AWARD (To be completed by Government)

20. AUTHORITY FOR USING OTHER THAN FULL AND OPEN COMPETITION:	21. ACCEPTED AS TO ITEMS NUMBERED	22. SUBMIT INVOICES VIA FAX FOR PAYMENT TO:	23. AMOUNT

24. NAME OF CONTRACTING OFFICER (Type or print)	25. UNITED STATES OF AMERICA	26. AWARD DATE
Shola Matthews	BY_____ (Signature of the Contracting Officer)	

Section B - Supplies or Services and Prices/Costs

The Contractor shall fabricate and supply Custom Crowd Control Barriers for use in the U.S. Capitol Building Washington, D.C. in accordance with the terms and conditions of the contract that results from this solicitation.

BASE

Number	Commodity Name	Quantity	Unit of Issue	Unit Price ($)	Total Cost ($, Inc. disc)
1	Custom Crowd Control Barriers	Total : 1.00	EA	$	$
	Description: Base- for the fabrication and delivery of a maximum of one hundred and fifty (150) custom crowd control barriers. Fabrication of custom crowd control barriers done in welded aluminum and painted to look like weathered bronze. The handrail profile is a custom extrusion and the posts are custom castings made to simulate original bronze railing and posts at the United States Capitol Building. Each section is made up of two posts and a section of railing that simply hangs from pins that interlock with tabs that protrude from the typical posts. A couple of modifications will be required to the mockup that is shown in the photos. We'll need some of the posts to have tabs such that we can make 90 degree angles, as well as the slight angles that the mockup allows. Also, the sections need to assemble easily and without tools, but there is a need to add something like clevis pins to make them slightly more difficult to disassemble than just lifting off the rail section. The attached photos should adequately describe what we are seeking to have fabricated, however, the mockup rail sections are available to see in person should that be deemed worthwhile. Our intent is to purchase approximately 150 railing sections immediately, with the option of additional purchases over the next two years.				
2	Custom Crowd Control Barriers	Total : 1.00	EA	$	$
	Description: Option 1- for the fabrication and delivery of a maximum of one hundred and fifty (150) custom crowd control barriers.				
3	Custom Crowd Control Barriers	Total : 1.00	EA	$	$
	Description: Option 2- for the fabrication and delivery of a maximum of one hundred and fifty (150) custom crowd control barriers.				

Lump-Sum Price for Base $

B2.1

B2. UNIT PRICE

.1 The unit price shall include all costs associated with fabrication and delivery of Custom Crowd Control Barriers procured under the contract that results from RFP080011. Unit price shall take precedence over total price.

Section C - Description/Specifications/Statement of Work

2

C.1 BACKGROUND

.1 The Contractor shall fabricate and supply Custom Crowd Control Barriers for use in the U.S. Capitol Building, Washington D.C.

C.1 SCOPE AND DESCRIPTION OF WORK

.1 Fabrication of custom crowd control barriers done in welded aluminum and painted to look like weathered bronze. The handrail profile is a custom extrusion and the posts are custom castings made to simulate original bronze railing and posts at the United States Capitol Building. Each section is made up of two posts and a section of railing that simply hangs from pins that interlock with tabs that protrude from the typical posts.

.2 A couple of modifications will be required to the mockup that s shown in the photos. The Architect of the Capitol will need some of the posts to have tabs such that can make 90 degree angles, as well as the slight angles that the mockup allows.

.3 Also, the sections need to assemble easily and without tools, but there is a need to add something like clevis pins to make them slightly more difficult to disassemble than just lifting off the rail section.

.4 The Architect of the Capitol s intent is to purchase approximately 150 railing sections immediately, with the option of additional purchases over the next two years.

C.3 PHOTOS OF CUSTOM CROWD CONTROL BARRIER

.1 Photos 001 through 007 attached to Section J of this solicitation adequately describes what the Government is seeking to have fabricated. However, the mockup rail sections are available to see in person should that be deemed worthwhile. To make arrangements to see the mockup rail in person, interested parties are instructed to call Perry Caswell at (202) 228-1051 Office or 202-329-7084 Cell during standard business hours of 8:30 am to 5:00 pm.

.2 Photo 008 attached to Section J of this solicitation is a photo of Custom Crowd Control Barriers with sizes.

C.4 DRAWING

.1 The Drawing below shows measurements of the size of the Custom Crow Control Barriers to be procured. (SEE ATTACHED DRAWING)

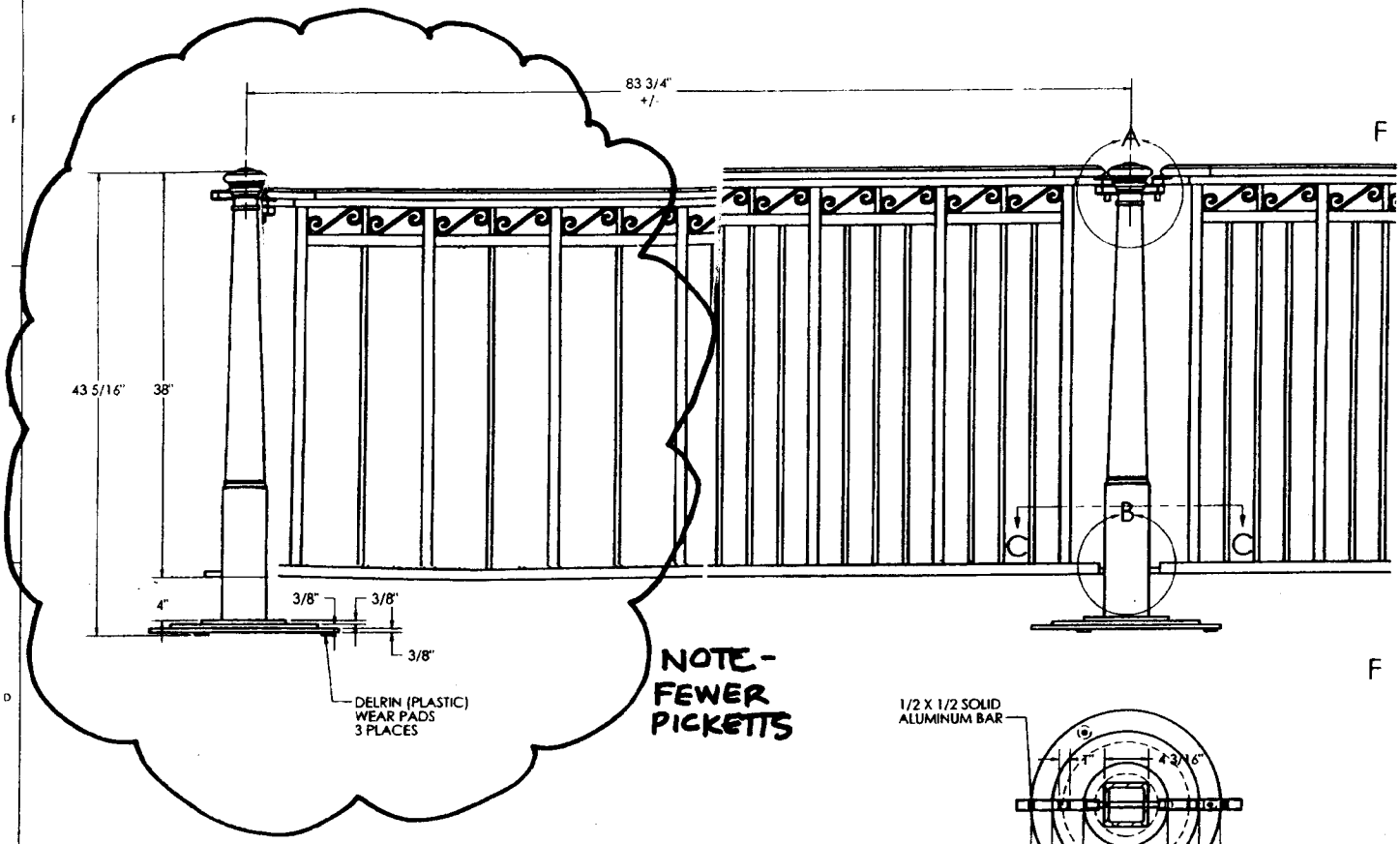

NOTE-
FEWER
PICKETTS

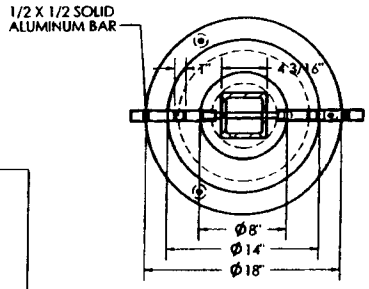

SECTION C-C
SCALE 1 : 8

NOTES:

1. POST WITH BASE TO WEIGH APPROX. 30 LBS.
2. ONE COMPLETE PANEL TO WEIGH APPROX. 46 LBS
3. FINISH T.B.D
4. POST TO BE SAND CAST ALUMINUM. BALANCE TO BE 6063-ALUM TUBE ,BAR AND PLATE
5. PINS FOR HANGING TO BE STAINLESS STEEL

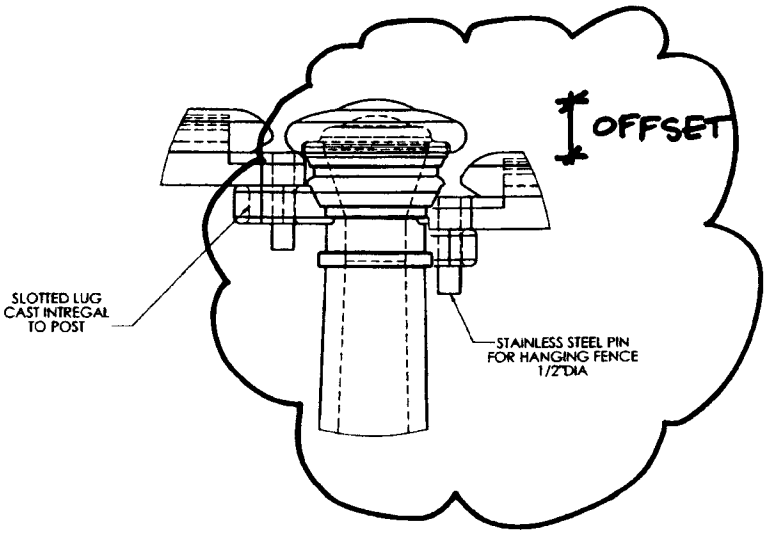

DETAIL A
SCALE 1 : 2

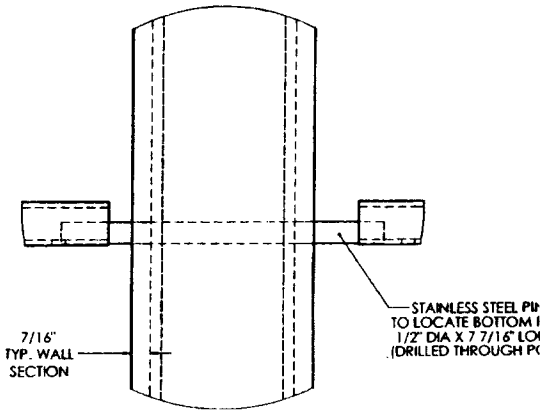

DETAIL B
SCALE 1 : 2

Section D - Packaging and Marking

3

D.1 PACKAGING

.1 All items procured under the contract shall be packaged in accordance with manufacturer's standard packaging.

D.2 MARKING DELIVERABLES

.1 Delivery invoice shall be plainly and legibly marked with the following information:
"Contract No", and the manufacturer's name.

.2 Mark Deliverables for Line Items 01 through 03 for:

Architect of the Capitol
Attention: Mr. Perry Caswell, or Mr. Don White
U.S. Capitol Building
Washington, D.C. 20515

End of Section D

Section E - Inspection and Acceptance

E.1

E.1 INSPECTION AND ACCEPTANCE

.1 The Contracting Officer or the Contracting Officer s technical representative shall inspect and accept the supplies and/or services to be provided under this contract.

.2 Inspection and acceptance of Items 1 through 3 will be performed at:

.1 U.S. Capitol Building
Washington, D.C. 20515

52.252-2 Sec. E

52.252-2 CLAUSES INCORPORATED BY REFERENCE (FEB 1998)

This contract incorporates one or more clauses by reference, with the same force and effect as if they were given in full text. Upon request, the Contracting Officer will make their full text available. Also, the full text of a clause may be accessed electronically at this/these address(es):

www.gsa.gov or www.arnet.gov

(End of clause)

Clauses By Reference

Clause	Title	Date
52.246-2	Inspection Of Supplies--Fixed Price	11/08/2006
52.246-16	Responsibility For Supplies	11/08/2006

Section F - Deliveries and Performance

AOC52.211-4

Term of Contract (Jan 2007)

The term of the basic contract shall be from date of award through 30 April 2008 with 2 one year optional periods..

(End of clause)

F.2

TIME FOR DELIVERY

.1 Deliveries for Item Nos.: 1 through 3 in the article entitled SCHEDULE OF ITEMS in Section B, shall be made to the location listed in Paragraph .1.1 of the article entitled DELIVERY REQUIREMENTS in this section

.2 Deliveries will be accepted between the hours of 7:30 a.m. and 1:00 p.m., Monday through Friday. No deliveries will be accepted on Saturdays, Sundays or Federal holidays.

F.3

DELIVERY REQUIREMENTS

.1 Item Nos. 1 through 3 shall be delivered, f.o.b. destination to the following addresses:

.1 Architect of the Capitol
Attention: Mr. Perry Caswell, Don White
U.S. Capitol Building
Washington, D.C. 20515

F.4

POINT OF CONTACT

.1 Delivery arrangements shall be co-ordinated at least 48 hours in advance of delivery with AOC s Mr. Perry Caswell by telephoning: (202) 228-0151 Office Phone, or (202) 329-7084 Cell Phone.

Sec. F 52.252-2

52.252-2 CLAUSES INCORPORATED BY REFERENCE (FEB 1998)

This contract incorporates one or more clauses by reference, with the same force and effect as if they were given in full text. Upon request, the Contracting Officer will make their full text available. Also, the full text of a clause may be accessed electronically at this/these address(es):

www.gsa.gov or www.arnet.gov

(End of clause)

Clauses By Reference

Clause	Title	Date
52.242-15	Stop-Work Order	11/08/2006
52.247-34	F.O.B. Destination	11/08/2006

Section G - Contract Administration Data

AOC52.201-1

Contracting Officers Authority (Jun 2004)

The Contracting Officer is the only person authorized to make or approve any changes in any of the requirements of this contract, notwithstanding any provision contained elsewhere in this contract. In the event that the Contractor makes any change at the direction of any person other than the Contracting Officer, the change will be considered to have been made without authority and no adjustment will be made in the contract price to cover any increase in costs incurred as a result thereof.

(End of clause)

AOC52.201-2

Contracting Officers Technical Representative (COTR) (Mar 2005)

The Government shall provide the name, address and telephone number of the COTR at the time of contract award and the duties thereby delegated to that person. Any subsequent change to the individual or the individual s responsibilities will be confirmed in writing by the Contracting Officer. In no instance will the COTR be delegated authority to order any change in the contractor s performance which would affect (a) cost or schedule for contracts for services or supplies, or (b) scope, the completion date for intermediate phases or milestones, or overall completion date for contracts for construction.

(End of clause)

AOC52.223-8

DELIVERY VEHICLE INSPECTION REQUIREMENTS (Apr 2007)

(a) All vehicles and contents used by the Contractor or his subcontractors which enter or leave United States Government property during performance of work under this contract will be subject to clearance, inspection, and identification procedures conducted by the United States Capitol Police.

(b) Mobile Vehicle and Cargo Inspection System (Mobile VACIS). All delivery vehicles carrying fuel, garbage, or similar cargo that cannot be offloaded for inspection and security screening shall utilize the Mobile VACIS located at Third and Pennsylvania Avenue, NW, Washington, DC, for inspection prior to making deliveries to any building within the Capitol Complex, including, but not limited to, the U.S. Capitol Building; the U.S. Botanic Garden; the Hart, Dirksen, and Russell Senate Office Buildings; the Rayburn, Longworth, Cannon, and Ford House Office Buildings; the Thomas Jefferson, John Adams, and James Madison Memorial Library of Congress buildings; the Capitol Power Plant; the Capitol Visitors Center; and the U.S. Supreme Court and Thurgood Marshall Federal Judiciary Buildings.

(c) 4700 Shepherd Parkway SW inspection facility. All other vehicles making deliveries to the above listed locations except for the U. S. Supreme Court shall utilize the off-site inspection and screening facilites at 4700 Shepherd Parkway SW, Washington, DC 20032.

(d) For all deliveries within seven calendar days or prior to the first delivery, the contractor shall provide the following information to the U.S. Capitol Police:

(1) List of drivers;

(2) Date of birth for each driver;

(3) Social Security Number of each driver;

(4) Vehicle make;

(5) Vehicle model;

(6) License tag number and state where vehicle is licensed;

(7) Color of vehicle; and

(8) Contractor name, if shown on the vehicle.

(e) Information for deliveries made through the Mobile VACIS unit must be faxed to (202) 228-4313. For verification of receipt, the contractor may call (202) 224-9728. Updates to the information for Mobile VACIS deliveries must be sent to the U.S. Capitol Police throughout the period of performance of the contract.

(f) Information for deliveries made through the Shepherd Parkway facility must be faxed to (202) 226-0571. For verification of receipt, the contractor may call (202) 226-0905. Updates to the information must be renewed April 30, August 31, and December 31 of each year and provided to the U. S. Capitol Police whenever repetitive deliveries are anticipated.

(End of clause)

AOC52.242-2

AOC52.2242-2 CONTRACTOR PERFORMANCE EVALUATIONS (DEC 2006)

At the conclusion of contract performance and/or at any point during the performance of this contract, the AOC may elect to evaluate the Contractor and submit a final or interim performance evaluation into the appropriate on-line database designated as the repository of Contractor evaluations for the Federal Government. Any evaluation submitted shall include input from the Contracting Officer's Technical Representative and other agency personnel, as appropriate, and the Contracting Officer. The Contractor shall have the opportunity to review any evaluations and submit supporting information for any differing of positions between the Contactor and the AOC in accordance with the protocol established by the specific on-line database.

(End of clause)

Section H - Special Contract Requirements

This page has been intentionally left blank.

Section I - Contract Clauses

52.223-3 Alt I

Hazardous Material Identification and Material Safety Data (Jan 1997) - Alternate I (July 1995)

(a) "Hazardous material," as used in this clause, includes any material defined as hazardous under the latest version of Federal Standard
No. 313 (including revisions adopted during the term of the contract).

(b) The offeror must list any hazardous material, as defined in paragraph (a) of this clause, to be delivered under this contract. The hazardous
material shall be properly identified and include any applicable identification number, such as National Stock Number or Special Item

Number. This information shall also be included on the Material Safety Data Sheet submitted under this contract.

Material (If none, list None)	Identification No.

(c) This list must be updated during performance of the contract whenever the Contractor determines that any other material to be delivered
under this contract is hazardous.

(d) The apparently successful offeror agrees to submit, for each item as required prior to award, a Material Safety Data Sheet, meeting the
requirements of 29 CFR 1910.1200(g) and the latest version of Federal Standard No. 313, for all hazardous material identified in paragraph
(b) of this clause. Data shall be submitted in accordance with Federal Standard No. 313, whether or not the apparently successful offeror is
the actual manufacturer of these items. Failure to submit the Material Safety Data Sheet prior to award may result in the apparently successful offeror being considered nonresponsible and ineligible for award.

(e) If, after award, there is a change in the composition of the item(s) or a revision to Federal Standard No. 313, which renders incomplete
or inaccurate the data submitted under paragraph (d) of this clause, the Contractor shall promptly notify the Contracting Officer and resubmit
the data.

(f) Neither the requirements of this clause nor any act or failure to act by the Government shall relieve the Contractor of any responsibility
or liability for the safety of Government, Contractor, or subcontractor personnel or property.

(g) Nothing contained in this clause shall relieve the Contractor from complying with applicable Federal, State, and local laws, codes,

ordinances, and regulations (including the obtaining of licenses and permits) in connection with hazardous material.

(h) The Government's rights in data furnished under this contract with respect to hazardous material are as follows:

(1) To use, duplicate and disclose any data to which this clause is applicable. The purposes of this right are to--

(i) Apprise personnel of the hazards to which they may be exposed in using, handling, packaging, transporting, or disposing of hazardous materials;

(ii) Obtain medical treatment for those affected by the material; and

(iii) Have others use, duplicate, and disclose the data for the Government for these purposes.

(2) To use, duplicate, and disclose data furnished under this clause, in accordance with paragraph (h)(1) of this clause, in precedence

over any other clause of this contract providing for rights in data.

(3) The Government is not precluded from using similar or identical data acquired from other sources.

(i) Except as provided in paragraph (i)(2), the Contractor shall prepare and submit a sufficient number of Material Safety Data Sheets
(MSDS's), meeting the requirements of 29 CFR 1910.1200(g) and the latest version of Federal Standard No. 313, for all hazardous materials
identified in paragraph (b) of this clause.

(1) For items shipped to consignees, the Contractor shall include a copy of the MSDS's with the packing list or other suitable shipping

document which accompanies each shipment. Alternatively, the Contractor is permitted to transmit MSDS's to consignees in advance

of receipt of shipments by consignees, if authorized in writing by the Contracting Officer.

(2) For items shipped to consignees identified by mailing address as agency depots, distribution centers or customer supply centers, the
Contractor shall provide one copy of the MSDS's in or on each shipping container. If affixed to the outside of each container, the MSDS's
must be placed in a weather resistant envelope.

(End of clause)

52.243-7

52.243-7 NOTIFICATION OF CHANGES (APR 1984)

(a) *Definitions*. "Contracting Officer," as used in this clause, does not include any representative of the Contracting Officer.

"Specifically authorized representative (SAR)," as used in this clause, means any person the Contracting Officer has so designated by written notice (a copy of which shall be provided to the Contractor) which shall refer to this subparagraph and shall be issued to the designated representative before the SAR exercises such authority.

(b) *Notice*. The primary purpose of this clause is to obtain prompt reporting of Government conduct that the Contractor considers to constitute a change to this contract. Except for changes identified as such in writing and signed by the Contracting Officer, the Contractor shall notify the Administrative Contracting Officer in writing, within 10 (to be negotiated) calendar days from the date that the Contractor identifies any Government conduct (including actions, inactions, and written or oral communications) that the Contractor regards as a change to the contract terms and conditions. On the basis of the most accurate information available to the Contractor, the notice shall state--

(1) The date, nature, and circumstances of the conduct regarded as a change;
(2) The name, function, and activity of each Government individual and Contractor official or employee involved in or knowledgeable about such conduct;
(3) The identification of any documents and the substance of any oral communication involved in such conduct;
(4) In the instance of alleged acceleration of scheduled performance or delivery, the basis upon which it arose;
(5) The particular elements of contract performance for which the Contractor may seek an equitable adjustment under this clause, including--

(i) What contract line items have been or may be affected by the alleged change;
(ii) What labor or materials or both have been or may be added, deleted, or wasted by the alleged change;
(iii) To the extent practicable, what delay and disruption in the manner and sequence of performance and effect on continued performance have been or may be caused by the alleged change;
(iv) What adjustments to contract price, delivery schedule, and other provisions affected by the alleged change are estimated; and

(6) The Contractor's estimate of the time by which the Government must respond to the Contractor's notice to minimize cost, delay or disruption of performance.

(c) *Continued performance*. Following submission of the notice required by (b) above, the Contractor shall diligently continue performance of this contract to the maximum extent possible in accordance with its terms and conditions as construed by the Contractor, unless the notice reports a direction of the Contracting Officer or a communication from a SAR of the Contracting Officer, in either of which events the Contractor shall continue performance; provided, however, that if the Contractor regards the direction or communication as a change as described in (b) above, notice shall be given in the manner provided. All directions, communications, interpretations, orders and similar actions of the SAR shall be reduced to writing and copies furnished to the Contractor and to the

Contracting Officer. The Contracting Officer shall countermand any action which exceeds the authority of the SAR.

(d) *Government response*. The Contracting Officer shall promptly, within 10 (to be negotiated) calendar days after receipt of notice, respond to the notice in writing. In responding, the Contracting Officer shall either--

(1) Confirm that the conduct of which the Contractor gave notice constitutes a change and when necessary direct the mode of further performance;
(2) Countermand any communication regarded as a change;
(3) Deny that the conduct of which the Contractor gave notice constitutes a change and when necessary direct the mode of further performance; or
(4) In the event the Contractor's notice information is inadequate to make a decision under (1), (2), or (3) above, advise the Contractor what additional information is required, and establish the date by which it should be furnished and the date thereafter by which the Government will respond.

(e) *Equitable adjustments*. (1) If the Contracting Officer confirms that Government conduct effected a change as alleged by the Contractor, and the conduct causes an increase or decrease in the Contractor's cost of, or the time required for, performance of any part of the work under this contract, whether changed or not changed by such conduct, an equitable adjustment shall be made--

(i) In the contract price or delivery schedule or both; and
(ii) In such other provisions of the contract as may be affected.

(2) The contract shall be modified in writing accordingly. In the case of drawings, designs or specifications which are defective and for which the Government is responsible, the equitable adjustment shall include the cost and time extension for delay reasonably incurred by the Contractor in attempting to comply with the defective drawings, designs or specifications before the Contractor identified, or reasonably should have identified, such defect. When the cost of property made obsolete or excess as a result of a change confirmed by the Contracting Officer under this clause is included in the equitable adjustment, the Contracting Officer shall have the right to prescribe the manner of disposition of the property. The equitable adjustment shall not include increased costs or time extensions for delay resulting from the Contractor's failure to provide notice or to continue performance as provided, respectively, in (b) and (c) above.

NOTE: The phrases "contract price" and "cost" wherever they appear in the clause, may be appropriately modified to apply to cost-reimbursement or incentive contracts, or to combinations thereof.

(End of clause)

AOC52.202-1

Definitions (Jun 2004)

(a) The term "head of the agency" as used herein means the Committee, Commission, or other authority of the Legislative Branch of the Government having final jurisdiction or supervision over the work involved. The term "other authority" as used in this paragraph includes the Contracting Officer in cases in which he has final jurisdiction or supervision over the work involved.

(b) The term "Architect" as used herein means the Architect of the Capitol.

(c) The term "Contracting Officer" as used herein means the Architect of the Capitol or his duly authorized representative.

(d) The term "his duly authorized representative" as used herein means any person or persons or board authorized to act for the head of the agency within the scope of their authority.

(e) Except as otherwise provided in this contract, the term "subcontracts" includes purchase orders placed for performance under this contract.

(End of clause)

AOC52.203-1

Advertising/Promotional Materials (Dec 2005)

(a) It is the policy of the Congress to discourage contractors providing services and supplies to the Legislative Branch entities, including the Architect of the Capitol, from advertising practices that feature the Capitol and Capitol Complex in a manner in which conveys, or is reasonably calculated to convey, a false impression of sponsorship, approval or endorsement of any product or service by the Congress, the Government of the United States, or any Department, Agency or instrumentality thereof.

(b) Contractors performing construction services for Legislative Branch entities, including the Architect of the Capitol, are

discouraged from capitalizing on their contractual relationships with such entities and shall not engage in advertising practices which convey, or are reasonably calculated to convey, a false impression of sponsorship, approval or endorsement of any product or service by the Congress, the Government of the United States, of any Department, Agency or instrumentality thereof. This includes utilizing, in conjunction with the fact of their contractual relationship, images of the Capitol, any other buildings in the Capitol Complex, or any part of the United States Capitol Grounds in their advertising or promotional materials; and/or publishing or disseminating the aforementioned advertising or promotional materials.

(c) The Contractor, by signing this contract, agrees to comply with the foregoing and to submit any proposed advertising or promotional copy connected in any manner with this contract and/or the Capitol, other Capitol Complex Buildings, or the United States Capitol Grounds to the Contracting Officer for approval prior to publication.

(d) If this solicitation is for supplies or services, including construction, to be provided to or performed for the United States Supreme Court, the Contractor, by signing this contract, agrees that he or she will not advertise the award of the contract in his/her commercial advertising in such a manner as to state or imply that the Supreme Court of the United States endorses a product, project, or commercial line of endeavor.

(End of clause)

AOC52.203-2

Disclosure of Information to the General Public (Jun 2004)

(a) Promptly after receiving any request from the general public for information on or data derived from this contract, the contractor shall notify the Architect of the Capitol, Procurement Division. The contractor shall cooperate with the Procurement Division in compiling or collecting information or data if the Architect of the Capitol determines the information or data to be releasable.

(b) General public, for purposes of this clause, are those groups or individuals who are not authorized by law or regulation to have access.

(c) This clause is not intended to prevent the contractor from providing contract information or data which the contractor is required to provide in order to conduct its business, such as insurance, banking, subcontracting.

(d) The contractor is permitted to request that proprietary information or data not be released if such release would harm or impair the contractor in conducting its normal business. Such request must be documented with clear and specific grounds for that claim.

(End of clause)

AOC52.204-1

Printed or Copied Double-sided on Recycled Paper (Jun 2004)

The Contractor is encouraged to submit paper documents, such as offers, letters, or reports, that are printed or copied doubled-sided on recycled paper and meet minimum content standards when not using electronic commerce methods to submit information or data to the Government.

(End of clause)

AOC52.204-4

AOC52.204-4 Personal Identity Verification of Contractor Personnel (Sep 2007)

(a) By entering into this contract, the Contractor agrees to comply with all Federal laws that apply to the Contractor's activities, including but not limited to the U.S. Citizenship and Immigration Services' requirement to maintain a signed copy of I-9 Employment Eligibility Verification for each employee in accordance with 8 U.S.C. 1324(a).

(b) The Employment Eligibility Verification Program (E-Verify), operated by the Department of Homeland Security and the Social Security Administration, allows U.S. employers to verify name, date of birth, and Social Security Number, as well as immigration information for non-citizens, against Federal databases in order to verify the employment eligibility of both citizen and non-citizen new hires. All contractors receiving AOC contracts are strongly encouraged to use this program to verify the status of their personnel. Information about the program can be obtained at www.dhs.gov/E-Verify or by calling 1-888-464-4218.

(c) The Contractor shall insert this clause in all subcontracts when the subcontractor is required to have physical access to a Federally-controlled facility or access to a Federal information system.

(End of clause)

AOC52.215-10

Examination of Records (Jun 2004)

(a) The Contractor agrees that the Architect of the Capitol or any duly authorized representatives shall, until the expiration of 3 years after final payment under this contract, have access to and the right to examine any books, accounting procedures and practices documents, papers, records and other data regardless of whether such items are in written form, in the form of computer data or in any other form and other supporting evidence, involving transactions related to this contract or compliance with any clause or certification thereunder.

(b) The Contractor further agrees to include in all its subcontracts hereunder a provision to the effect that subcontractor agrees that the Architect of the Capitol or any authorized representatives shall, until the expiration of 3 years after final payment under the subcontract, have access to and the right to examine books, documents, papers, records other data regardless of whether such items are in written form, in the form of computer data or in any other form, and other supporting evidence, involving transactions related to the subcontract or compliance with any clause or certification thereunder.

(c) The term subcontract as used in this clause excludes purchase orders not exceeding $10,000.

(End of clause)

AOC52.219-1

Utilization of Small Business Concerns (Aug 2004)

(a) It is the policy of the Government as declared by the Congress that a fair proportion of the purchases and contracts for supplies and services for the Government be placed with all types of small business concerns as determined by the size standards in 13 CFR 121.

(b) The Contractor agrees to accomplish the maximum amount of subcontracting to all types of small business concerns that the Contractor finds to be consistent with the efficient performance of this contract.

(End of clause)

AOC52.222-3

Convict Labor (Jun 2004)

In connection with the performance of work under this contract the Contractor agrees not to employ any person undergoing sentence of imprisonment except as provided by Public Law 89-176, approved September 10, 1965, 18 U.S.C. 4082(c)(2).

(End of clause)

AOC52.223-1

Hazardous Material Identification and Material Safety Data - Supplement (Jun 2005)

(a) Except as provided in paragraph (c), the Contractor shall prepare and submit a sufficient number of Material Safety Data Sheets (MSDS s), meeting the requirements of 29 CFR 1910.1200(g) and the latest version of Federal Standard No. 313, for all hazardous materials identified in FAR 52.223-3(b).

(b) For items shipped to consignees, the Contractor shall include a copy of the MSDS s with the packing list or other suitable shipping document which accompanies each shipment. Alternatively, the Contractor is permitted to transmit MSDS s to consignees in advance of receipt of shipments by consignees, if authorized in writing by the Contracting Officer.

(c) For items shipped to consignees identified by mailing address as agency depots, distribution centers or customer supply centers, the Contractor shall provide one copy of the MSDS in or on each shipping container. If affixed to the outside of each container, the MSDS s must be placed in a weather resistant envelope.

(d) For items provided to a construction site, the contractor shall provide two copies of each MSDS. One copy shall be provided to the COTR in accordance with the Division 1 submittal requirements, and a second copy shall be kept in an MSDS binder on the job site.

(End of clause)

AOC52.223-9

Accident Prevention and Safety and Health Programs (Sep 2004)

(a) The Contractor shall comply with the safety and health standards published in 41 C.F.R. Part 50-205, including any matters incorporated by reference therein.

(b) The Contractor shall also comply with the regulations issued by the Secretary of Labor pursuant to the Williams-Steiger Occupational Safety and Health Act of 1970, as set forth in Title 29 of the Code of Federal Regulations.

(c) The Contractor shall bring to the attention of the Architect any work encountered that may involve entry into a suspected confined space as defined by OSHA. A determination will be made by the Architect, and if the areas is deemed a permit required confined space, additional protective measures will be needed, per OSHA requirements.

(d) In the event that conditions on the site pose an imminent danger or threat to the Contractor s workers, the public, Government employees, other persons, or to Capitol complex structures and property of historical significance, the Contracting Officer can verbally order the Contractor to stop work operations in the specified area until said conditions are corrected to the Contracting Officer s satisfaction. The Contracting Officer shall promptly issue a written order to stop the work to the Contractor formalizing the specifics of the verbal stop work order.

(e) The Contractor shall not be entitled to any equitable adjustment of the contract price or extension of the performance schedule on any stop work order issued under this clause.

(End of clause)

AOC52.223-11

AOC52.223-11 Affirmative Procurement and Identification of Biobased Products (May 2007)

(a) Definition. "Biobased product", (7 U.S.C. 8101(2)) means a product determined by the U.S. Department of Agriculture to be a commercial or industrial product (other than food or feed) that is composed, in whole or in significant part, of biological products or renewable domestic agricultural materials (including plant, animal, and marine materials) or forestry materials.
(b) The Architect of the Capitol has a preference for biobased products. By submitting an offer on any item(s) identified as a biobased product, the offeror is certifying that, if awarded a contract or order for the biobased product, the offeror will provide a biobased product in conformance with the determination(s) made in paragraph (a) of this provision. Failure to provide the identified biobased product may result in termination for default of any contract or order awarded as a result of this solicitation.
(c) If a product in this solicitation is not identified as a biobased product and the offeror submits a proposal that voluntarily contains a biobased product, the offeror shall clearly identify its voluntary biobased product in its offer. If awarded a contract or order for the voluntary biobased product, the contractor is responsible for --

(1) providing the biobased product; or,
(2) If unable to provide the voluntary biobased product after award, notifying the AOC that the voluntary biobased product will not be provided and provide documentation on why the voluntary biobased product will not be provided.

(d) Information about biobased products is available at http://www.biobased.oce.usda.gov.

(End of provision)

AOC52.225-1

Buy American Act - Supplement (Jun 2004)

In addition to provisions of the above clause entitled, Buy American Act, the General Provisions of the Legislative Branch Appropriations Act provides in part, as follows:

(a) It is the sense of the Congress that, to the greatest extent practicable, all equipment and products purchased with funds made available in the Act should be American-made.

(b) In providing financial assistance to or entering into any contract with, any entity using funds made available in the Act, the head of each Federal Agency, to the greatest extent practicable, shall provide to such entity a notice describing the statement made in Paragraph (a) above, by the Congress.

(End of clause)

AOC52.227-1

Patent Indemnity - Commercial Items (Jun 2004)

The Contractor shall indemnify the Government and its officers, employees and agents against liability, including costs, for actual or

alleged direct or contributory infringement of, or inducement to infringe, any United States or foreign patent, trademark or copyright, arising out of the performance of the contract, provided the Contractor is reasonably notified of such claims and proceedings.

(End of clause)

AOC52.232-1

Payments - Supplies (Feb 2007)

(a) The Contractor shall be paid, upon the submission of proper invoices or vouchers, the prices stipulated herein for supplies delivered and accepted or services rendered and accepted, less deductions, if any, as herein provided. Unless otherwise specified, payment will be made on partial deliveries accepted by the Government when the amount due on such deliveries so warrants; or, when requested by the Contractor and not otherwise specified, payment for accepted partial deliveries shall be made whenever such payment would equal [50 percent of the total amount of this contract].

(b) If partial payments are to be made, all material and work covered by partial payments made shall thereupon become the sole property of the Government, but this provision shall not be construed as relieving the Contractor from the sole responsibility of fulfilling contractual requirements for all material and work upon which payments have been made or the restoration of any damaged work, or as waiving the right of the Government to require the fulfillment of all of the terms of the contract.

(c) Upon completion and acceptance of all work, the amount due the Contractor under this contract will be paid upon the presentation of a properly executed invoice and after the Contractor shall have furnished the Government with a release, if required, of all claims against the Government arising under and by virtue of this contract, other than claims, if any, in stated amounts as may be specifically excepted by the Contractor from the operation of the release. If the Contractor's claim to amounts payable under the contract has been assigned under the Assignment of Claims Act of 1940, as amended (31 U.S.C. 3727, 41 U.S.C. 15), a release may also be required of the assignee.

(d) Until further notice, properly certified invoices shall be FAXED to the Accounting Office, Architect of the Capitol at 202-226-2580. Information concerning requirements for payment requisitions must be secured by telephoning the Accounting Officer at (202) 226-2552. To assist the AOC in making timely payments, the Contractor is requested to furnish the following additional information on the invoice:

(1) Contract number;

(2) Name, address and Taxpayer I.D.of Contractor;

(3) Invoice Date;

(4) Unique invoice number for that particular invoice; and

(5) Amount by line item including quantity and unit pricing (see the SCHEDULE OF ITEMS in Section B)

(e) Payments will be made directly to the contractor s financial institution through Direct Deposit/Electronic Funds Transfer (DD/EFT). The Contractor s attention is directed to the requirements of AOC52.232-6, Payment by Electronic Funds Transfer - Other Than Central Contractor Registration.

(End of clause)

AOC52.232-6

Payment by Electronic Funds Transfer - Other than Central Contractor Registration (Jun 2004)

(a) Method of payment.

(1) All payments by the Government under this contract shall be made by electronic funds transfer (EFT) except as provided in paragraph (a)(2) of this clause. As used in this clause, the term "EFT" refers to the funds transfer.

(2) In the event the Government is unable to release one or more payments by EFT, the contractor agrees to either

(i) Accept payment by check or some other mutually agreeable method of payment; or

(ii) Request the Government to delay payment until such time as the Government makes payment by EFT (but see paragraph (d)).

(b) Mandatory submission of Contractor s EFT information. (1) The Contractor is required to provide the Government with the information required to make payment by EFT (see paragraph (i) of this clause). The contractor shall provide this information directly

to the office designated in paragraph (k) to receive that information (hereafter: "designated office") by three working days after notification of contract award. If not otherwise specified in this contract, the payment office is the designated office for receipt of the contractor s EFT information. If more than one designated office is named for the contract, the contractor shall provide a separate notice to each office. In the event that the EFT information changes, the contractor shall be responsible for providing the updated information to the designated office(s).

(2) If the contractor provides EFT information applicable to multiple contracts, the contractor shall specifically state the applicability of this EFT information in terms acceptable to the designated office. However, EFT information supplied to a designated office shall be applicable only to contracts that identify that designated office as the office to receive EFT information for that contract.

(c) Mechanisms for EFT payment. The Government may make payment by EFT through the Automated Clearing House (ACH) network, subject to the rules of the National Automated Clearing House Association. The rules governing Federal payments through the ACH are contained in 31 CFR part 210.

(d) Suspension of payment.

(1) Notwithstanding the provisions of any other clause of this contract, the Government is not required to make any payment under this contract until after receipt, by the designated payment office, of the correct EFT payment information from the Contractor. Until receipt of the correct EFT information, any invoice or contract financing request shall be deemed not to be a valid invoice.

(2) If the EFT information changes after submission of correct EFT information, the Government shall begin using the changed EFT information no later than the 30 days after its receipt by the designated office to the extent payment is made by EFT. However, the Contractor may request that no further payments be made until the changed EFT information is implemented by the payment office.

(e) Liability for uncompleted or erroneous transfers. (1) If an uncompleted or erroneous transfer occurs because the Government failed to use the Contractor provided EFT information in the correct manner, the Government remains responsible for--

(i) Making a correct payment; and

(ii) Recovering any erroneously directed funds.

(2) If an uncompleted or erroneous transfer occurs because Contractor s EFT information was incorrect at the time of Government release or was revised within 30 days of Government release of the EFT payment transaction instruction to the Federal Reserve System, and

(i) If the funds are no longer under the control of the payment office, the Government is deemed to have made payment and the Contractor is responsible for recovery of any erroneously directed funds; or

(ii) If the funds remain under the control of the payment office, the Government shall not make payment and the provisions of paragraph (d) shall apply.

(f) EFT and assignment of claims. If the contractor assigns the proceeds of this contract as provided for in the assignment of claims terms of this contract, the contractor shall require as a condition of any such assignment that the assignee shall provide the EFT information required by paragraph (i) of this clause to the designated office and shall be paid by EFT in accordance with the terms of this clause. In all respects, the requirements of this clause shall apply to the assignee as if it were the contractor. EFT information that shows the ultimate recipient of the transfer to be other than the contractor, in the absence of a proper assignment of claims acceptable to the Government, is incorrect EFT information within the meaning of Paragraph (d) of this clause.

(g) Liability for change of EFT information by financial agent. The Government is not liable for errors resulting from changes to EFT information provided by the contractor s financial agent.

(h) Payment information. The payment or disbursing office shall forward to the Contractor available payment information that is suitable for transmission as of the date of release of the EFT instruction to the Federal Reserve System. The Government may request the Contractor to designate a desired format and method(s) for delivery of payment information from a list of formats and methods the payment office is capable of executing. However, the Government does not guarantee that any particular format or method of delivery is available at any particular payment office and retains the latitude to use the format and delivery method most convenient to the Government. If the Government makes payment by check in accordance with paragraph (a) of this clause, the Government shall mail the payment information to the remittance address in the contract.

(i) EFT Information. The contractor shall provide the following information to the designated payment office. The contractor may supply this data for this or multiple contracts (see paragraph (b) of this clause). The Contractor shall designate a single financial agent per contract capable of receiving and processing the EFT information using the EFT methods described in paragraph (c) of this clause. The information required is as follows:

(1) The contract number;

(2) The contractor s name and remittance address as stated in the contract(s);

(3) The signature (manual or electronic, as appropriate), title, and telephone number of the contractor s official authorized to provide this information;

(4) The name, address, and 9 digit Routing Transit Number of the contractor s financial agent; and

(5) The contractor s account number and the type of account (checking, saving or lockbox).

(j) The Contractor shall send all EFT information, and any changes to EFT information to the office designated in paragraph (k) of this clause. The Contractor shall not send EFT information to the payment office, or any other office than that designated in paragraph (k). The Government need not use any EFT information sent to any office other than that designated in paragraph (k).

(k) Designated office:

Name:
Architect of the Capital
Accounting Division
Mailing Address:
2nd and D Streets SW
Ford House Office Building
Washington, DC 20515

Telephone:
(202) 226-2552
Facsimile:
(202) 225-7321

(End of clause)

AOC52.232-7

Discounts (Aug 2004)

(a) Discounts for prompt payment will not be considered in the evaluation of offers. However, any offered discount will form a part of the award, and will be taken if payment is made within the discount period indicated in the offer by the offeror. As an alternative to offering a prompt payment discount in conjunction with the offer, offerors awarded contracts may include prompt payment discounts on individual invoices.

(b) In connection with any discount offered for prompt payment, time shall be computed from the date of the invoice. If the Contractor has not placed a date on the invoice, the due date shall be calculated from the date the designated billing office receives a proper invoice, provided the agency annotates such invoice with the date of receipt at the time of receipt. For the purpose of computing the discount earned, payment shall be considered to have been made on the date that appears on the payment check or, for an electronic funds transfer, the specified payment date. When the discount date falls on a Saturday, Sunday, or legal holiday and, for work performed in the District of Columbia, Presidential Inauguration Day, when Federal Government offices are closed and Government business is not expected to be conducted, payment may be made on the following business day.

(End of clause)

AOC52.232-9

Payment of Interest on Contractor Claims (Jun 2004)

(a) If an appeal is filed by the Contractor from a final decision of the Contracting Officer under the Disputes paragraph of this contract, denying a claim arising under the contract, simple interest on the amount of the claim finally determined owed by the Government shall be payable to the Contractor. Such interest shall be at the rate determined by the Secretary of the Treasury pursuant to Public Law 92 41, 85 Stat. 97, from the date the Contractor furnishes to the Contracting Officer his written appeal under the Disputes paragraph of this contract, to the date of (1) a final judgement by a court of competent jurisdiction, or (2) mailing to the Contractor of a change order, or a supplemental agreement for execution either confirming completed negotiations between the parties or carrying out a decision of a contract appeals board.

(b) Notwithstanding Paragraph (a) above, (1) interest shall be applied only from the date payment was due, if such date is later than the filing of appeal, and (2) interest shall not be paid for any period of time that the Contracting Officer determines the Contractor has

unduly delayed in pursuing his remedies before a board of contract appeals or a court of competent jurisdiction.

(End of clause)

AOC52.232-12

Assignment - Supplement (Sep 2004)

Neither the contract nor any interest therein shall be assigned. However, moneys due or to become due under the contract may be assigned in accordance with the provisions of FAR clause 52.232-23 (ASSIGNMENT OF CLAIMS) as incorporated by reference in Section I.

(End of clause)

AOC52.233-1

Disputes (Jun 2004)

(a) Except as otherwise provided in this contract, any dispute concerning a question of fact arising under this contract which is not disposed of by agreement shall be decided by the Contracting Officer, who shall reduce his decision to writing and mail or otherwise furnish a copy thereof to the Contractor. The decision of the Contracting Officer shall be final and conclusive unless, within 30 days from the date of receipt of such copy, the Contractor mails or otherwise furnishes to the Contracting Officer a written appeal addressed to the head of the agency involved. The decision of the head of the agency or his duly authorized representative for the determination of such appeals shall be final and conclusive. This provision shall not be pleaded in any suit involving a question of fact arising under this contract as limiting judicial review of any such decision to cases where fraud by such official or his representative or board is alleged; provided, however, that any such decision shall be final and conclusive unless the same is fraudulent or capricious or arbitrary or so grossly erroneous as necessarily to imply bad faith or is not supported by substantial evidence. In connection with any appeal proceeding under this paragraph, the Contractor shall be afforded an opportunity to be heard and to offer evidence in support of his appeal. Pending final decision of a dispute hereunder, the Contractor shall proceed diligently with the performance of the contract and in accordance with the Contracting Officer's decision.

(b) This paragraph does not preclude consideration of questions of law in connection with decisions provided for in Paragraph (a) above. Nothing in this contract, however, shall be construed as making final the decision of any administrative official, representative, or board on a question of law.

(End of clause)

AOC52.233-2

Claims for Equitable Adjustments - Waiver and Release of Claims (Jun 2004)

(a) Whenever the Contractor submits a claim for equitable adjustment under any paragraph of this contract which provides for equitable adjustment of the contract, such claim shall include all types of adjustments in the total amounts to which the paragraph entitles the Contractor, including but not limited to adjustments arising out of delays or disruptions or both caused by such change. Except as the parties may otherwise expressly agree, the Contractor shall be deemed to have waived (1) any adjustments to which it otherwise might be entitled under the paragraph where such claims fail to request such adjustments, and (2) any increase in the amount of equitable adjustments additional to those requested in its claim.

(b) Further, the Contractor agrees that, if required by the Contracting Officer, he will execute a release, in form and substance satisfactory to the Contracting Officer, as part of the supplemental agreement setting forth the aforesaid equitable adjustment, and that such release shall discharge the Government, its officers, agents and employees, from any further claims, including but not limited to further claims arising out of delays or disruptions or both, caused by the aforesaid change.

(End of clause)

AOC52.246-4

Warranty of Non-commercial Items (Jun 2004)

(a) Definitions. "Acceptance", as used in this clause, means the act of an authorized representative of the Government by which the Government assumes for itself, or as an agent of another, ownership of existing supplies, or approves specific services as partial or complete performance of the contract.

"Correction", as used in this clause, means the elimination of a defect.

"Supplies", as used in this clause, means the end item furnished by the Contractor and related services required under the contract. The word does not include "data".

(b) Contractor's Obligation. (1) Notwithstanding inspection and acceptance by the Government of supplies furnished under this contract, or any condition of this contract concerning the conclusiveness thereof, the Contractor warrants that for [The Contracting Officer shall insert a specific period of time after delivery or the specified event whose occurrence will terminate the warranty period] from the date of final delivery and acceptance all supplies furnished under this contract will be free from defects in material or workmanship and will conform with all requirements of this contract; and

(2) The preservation, packaging, packing, and marking, and the preparation for, and method of, shipment of such supplies will conform with the requirements of this contract.

(c) When return, correction, or replacement is required, transportation charges and responsibility for the supplies while in transit shall be borne by the Contractor. However, the Contractor's liability for the transportation charges shall not exceed an amount equal to the cost of transportation by the usual commercial method of shipment between the place of delivery specified in this contract and the Contractor's plant, and return.

(d) Any supplies or parts thereof, corrected or furnished in replacement under this clause, shall also be subject to the terms of this clause to the same extent as supplies initially delivered. The warranty, with respect to supplies or parts thereof, shall be equal in duration to that in paragraph (b)(1) of this clause and shall run from the date of delivery of the corrected or replaced supplies.

(e) All implied warranties of merchantability and "fitness for a particular purpose" are excluded from any obligation contained in this contract.

(f) The rights and remedies of the Government provided in this clause are in addition to and do not limit any rights afforded to the Government by any other clause of this contract.

(End of clause)

52.252-2 Sec. I

52.252-2 CLAUSES INCORPORATED BY REFERENCE (FEB 1998)

This contract incorporates one or more clauses by reference, with the same force and effect as if they were given in full text. Upon request, the Contracting Officer will make their full text available. Also, the full text of a clause may be accessed electronically at this/these address(es):

www.gsa.gov or www.arnet.gov

(End of clause)

Clauses By Reference

Clause	Title	Date
52.203-3	Gratuities	11/08/2006
52.203-5	Covenant Against Contingent Fees	11/08/2006
52.203-6	Restrictions On Subcontractor Sales To The Government	11/08/2006
52.211-5	Material Requirements	11/08/2006
52.215-2	Audit and Records--Negotiation	11/08/2006
52.222-20	Walsh-Healy Public Contracts Act	11/08/2006
52.222-26	Equal Opportunity	03/22/2007
52.222-35	Equal Opportunity For Special Disabled Veterans, Veterans of the Vietnam Era and Other Eligible Veterans	11/08/2006

Clause	Title	Date
52.222-36	Affirmative Action For Workers With Disabilities	11/08/2006
52.222-37	Employment Reports On Special Disabled Veterans, Veterans Of The Vietnam Era, and Other Eligible Veterans	11/08/2006
52.223-6	Drug Free Workplace	11/08/2006
52.225-1	Buy American Act--Supplies	11/08/2006
52.227-3	Patent Indemnity	11/08/2006
52.229-3	Federal, State And Local Taxes	11/08/2006
52.232-11	Extras	11/08/2006
52.232-23	Assignment Of Claims	11/08/2006
52.242-13	Bankruptcy	11/08/2006
52.243-1	Changes--Fixed Price	11/08/2006
52.249-2	Termination For Convenience Of The Government (Fixed-Price)	09/01/1996
52.249-8	Default (Fixed-Price Supply & Service)	11/08/2006

Section J - List of Attachments

J.1

LIST OF ATTACHMENTS

1) PAYMENT INFORMATION FORM, ACH VENDOR PAYMENT SYSTEM, 2 Pages.
(for informational purposes only - Awardee is required to furnish)

2) PHOTO 001, CUSTOM CROWD CONTROL BARRIERS 1 Page.

3) PHOTO 002, CUSTOM CROWD CONTROL BARRIERS 1 Page.

4) PHOTO 003, CUSTOM CROWD CONTROL BARRIERS 1 Page.

5) PHOTO 004, CUSTOM CROWD CONTROL BARRIERS 1 Page.

6) PHOTO 005, CUSTOM CROWD CONTROL BARRIERS 1 Page.

7) PHOTO 006, CUSTOM CROWD CONTROL BARRIERS 1 Page.

8) PHOTO 007, CUSTOM CROWED CONTROL BARRIERS, 1 Page.

9) PHOTO 008, CUSTOM CROWD CONTROL BARRIERS WITH SIZES, 1 Page.

END OF SECTION J

**** NOTICE ****

TO: ALL VENDORS/CONTRACTORS/CONSULTANTS

FROM: THE OFFICE OF THE ARCHITECT OF THE CAPITOL

Due to requirements set forth in the DEBT COLLECTION IMPROVEMENT ACT OF 1996 (PUBLIC LAW 104-134), all payments made to vendors, contractors and consultants doing business with the Federal Government must be made by Electronic Funds Transfer (EFT) directly to your financial institution. If you are currently enrolled under EFT with the Architect of the Capitol, no further action is necessary other than to report changes.

EFT payments are cost effective, enabling prompt, convenient and reliable payments directly to a designated bank account.

The Architect of the Capitol, in making EFT payments, supplies the financial institution with identifying information (ie. invoice number), which accompanies each transaction. The financial institution in turn can supply this information to the account holder.

Therefore, to accomplish the mandate of P. L. 104-134, it is necessary that the attached sheet; PAYMENT INFORMATION FORM ACH VENDOR PAYMENT SYSTEM be completed and returned with your bid or offer as set forth in Section G of the solicitation.

PAYMENT INFORMATION FORM
ACH VENDOR PAYMENT SYSTEM

This form is used for ACH payments with an addendum record that carries payment-related information. Recipients of these payments should bring this information to the attention of their financial institution when presenting this form for completion. The information will be transmitted in the CCD+ format to the designated financial institution.

Debt Collection Improvement Act of 1996

PAPERWORK REDUCTION ACT STATEMENT

The information being collected on this form is pursuant to Public Law 104-134, which mandated Electronic Funds Transfer for recipients of all federal payments (excluding IRS tax refunds) beginning July 24, 1996. This information will be needed by the Treasury Department to transmit payments and related data.

COMPANY INFORMATION	
NAME:	
ADDRESS:	
CONTRACT NUMBER: AOC-_____	TAXPAYER IDENTIFICATION NUMBER (TIN):
CONTACT PERSON NAME:	TELEPHONE NUMBER: ( ) FAX NUMBER: ( )

AGENCY INFORMATION	
NAME: ARCHITECT OF THE CAPITOL - FORD HOUSE OFFICE BUILDING	
ADDRESS: ACCOUNTING DIVISION, ROOM H2-205	
WASHINGTON, D.C. 20024	FAX NUMBER: (202) 225-7321
CONTACT PERSON NAME: MR. JAMES JARBOE	TELEPHONE NUMBER: (202) 226-2552

FINANCIAL INSTITUTION INFORMATION	
BANK NAME:	
BRANCH LOCATION: (If applicable)	
CONTACT NAME:	TELEPHONE NUMBER: ( )
NINE DIGIT ROUTING TRANSIT NUMBER: _ _ _ _ _ _ _ _ _	
DEPOSITOR ACCOUNT NUMBER:	
TYPE OF ACCOUNT: ____ CHECKING ____ SAVINGS ____ LOCKBOX	
SIGNATURE AND TITLE OF REPRESENTATIVE:	TELEPHONE NUMBER:

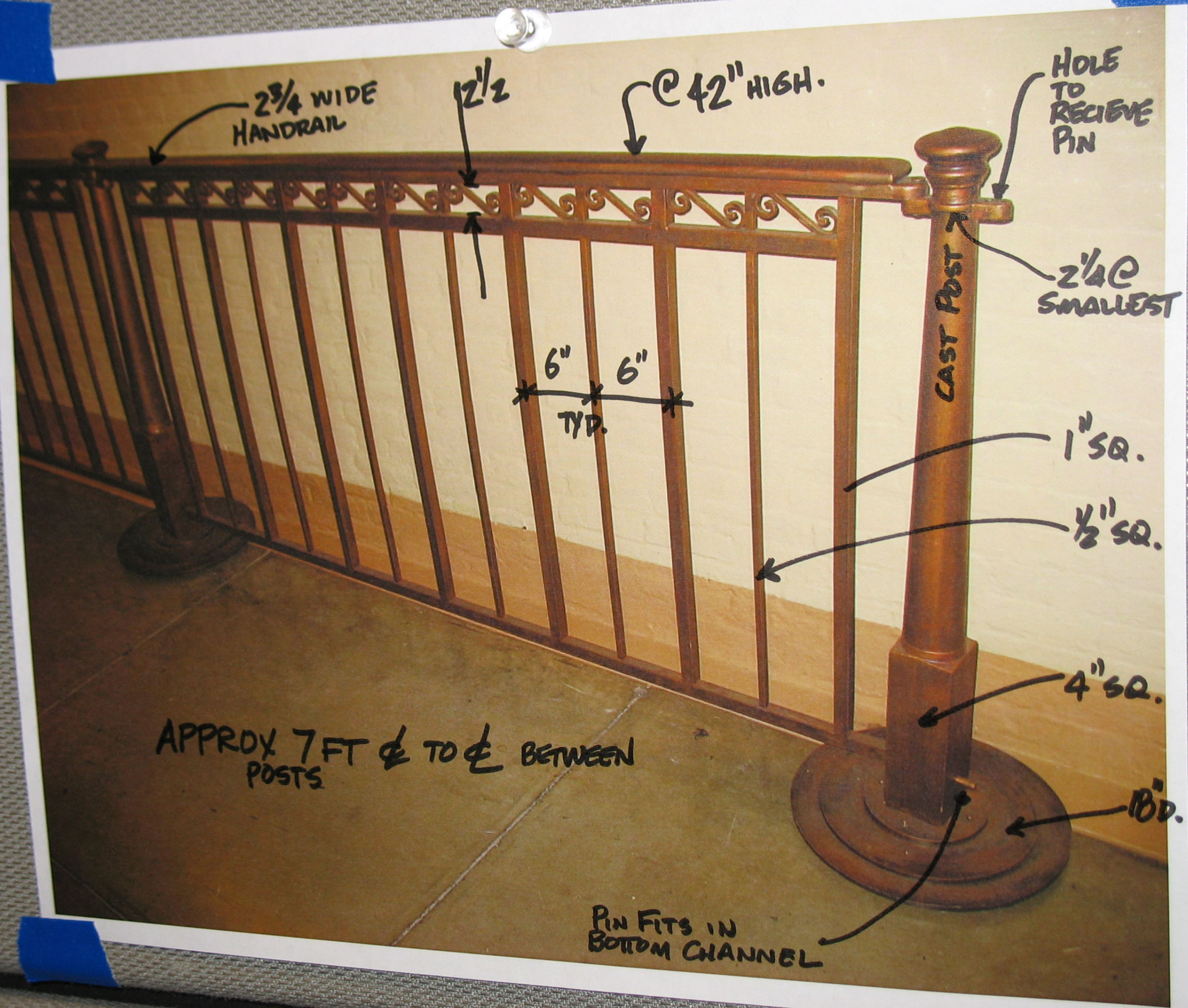
2 3/4 WIDE HANDRAIL
12 1/2
@ 42" HIGH.
HOLE TO RECIEVE PIN
2 1/4 @ SMALLEST
CAST POST
6"
6"
TYP.
1" SQ.
1/2" SQ.
4" SQ.
18" D.
APPROX 7 FT ℄ TO ℄ BETWEEN POSTS
PIN FITS IN BOTTOM CHANNEL

Section K - Representations, Certifications and Other Statements of Offerors

52.203-2

Certificate of Independent Price Determination (Apr 1985)

(a) The offeror certifies that--

(1) The prices in this offer have been arrived at independently, without, for the purpose of restricting competition, any consultation, communication, or agreement with any other offeror or competitor relating to--

(i) Those prices;

(ii) The intention to submit an offer; or

(iii) The methods or factors used to calculate the prices offered.

(2) The prices in this offer have not been and will not be knowingly disclosed by the offeror, directly or indirectly, to any other offeror or competitor before bid opening (in the case of a sealed bid solicitation) or contract award (in the case of a negotiated solicitation) unless otherwise required by law; and

(3) No attempt has been made or will be made by the offeror to induce any other concern to submit or not to submit an offer for the purpose of restricting competition.

(b) Each signature on the offer is considered to be a certification by the signatory that the signatory--

(1) Is the person in the offeror's organization responsible for determining the prices being offered in this bid or proposal, and that the signatory has not participated and will not participate in any action contrary to paragraphs (a)(1) through (a)(3) of this provision; or

(2)(i) Has been authorized, in writing, to act as agent for the following principals in certifying that those principals have not participated, and will not participate in any action contrary to paragraphs (a)(1) through (a)(3) of this provision
[insert full name of person(s) in the offeror s organization responsible for determining the prices offered in this bid or proposal, and the title of his or her position in the offeror s organization];

(ii) As an authorized agent, does certify that the principals named in subdivision (b)(2)(i) of this provision have not participated, and will not participate, in any action contrary to paragraphs (a)(1) through (a)(3) of this provision; and

(iii) As an agent, has not personally participated, and will not participate, in any action contrary to paragraphs (a)(1) through (a)(3) of this provision.

(c) If the offeror deletes or modifies paragraph (a)(2) of this provision, the offeror must furnish with its offer a signed statement setting forth in detail the circumstances of the disclosure.

(End of provision)

52.204-3

Taxpayer Identification (Oct 1998)

(a) *Definitions*.

"Common parent," as used in this provision, means that corporate entity that owns or controls an affiliated group of corporations that files its Federal income tax returns on a consolidated basis, and of which the offeror is a member.

"Taxpayer Identification Number (TIN)," as used in this provision, means the number required by the Internal Revenue Service (IRS) to be used by the offeror in reporting income tax and other returns. The TIN may be either a Social Security Number or an Employer Identification Number.

(b) All offerors must submit the information required in paragraphs (d) through (f) of this provision to comply with debt collection requirements of 31 U.S.C. 7701(c) and 3325(d), reporting requirements of 26 U.S.C. 6041, 6041A, and 6050M, and implementing regulations issued by the IRS. If the resulting contract is subject to the payment reporting requirements described in Federal

Acquisition Regulation (FAR) 4.904, the failure or refusal by the offeror to furnish the information may result in a 31 percent reduction of payments otherwise due under the contract.

(c) The TIN may be used by the Government to collect and report on any delinquent amounts arising out of the offeror's relationship with the Government (31 U.S.C. 7701(c)(3)). If the resulting contract is subject to the payment reporting requirements described in FAR 4.904, the TIN provided hereunder may be matched with IRS records to verify the accuracy of the offeror's TIN.

(d) *Taxpayer Identification Number (TIN).*

__TIN: _____.

__TIN has been applied for.

__TIN is not required because:

__Offeror is a nonresident alien, foreign corporation, or foreign partnership that does not have income effectively connected with the conduct of a trade or business in the United States and does not have an office or place of business or a fiscal paying agent in the United States;

__Offeror is an agency or instrumentality of a foreign government;

__Offeror is an agency or instrumentality of the Federal Government.

(e) *Type of organization*.

__Sole proprietorship;

__Partnership;

__Corporate entity (not tax-exempt);

__Corporate entity (tax-exempt);

__Government entity (Federal, State, or local);

__Foreign government;

__International organization per 26 CFR 1.6049-4;

__Other _____.

(f) *Common parent*.

__Offeror is not owned or controlled by a common parent as defined in paragraph (a) of this provision.

__Name and TIN of common parent:

Name _____.

TIN _____.

(End of provision)

52.209-5

Certification Regarding Debarment, Suspension, Proposed Debarment, and Other Responsibility Matters (Dec 2001)

(a)(1) The Offeror certifies, to the best of its knowledge and belief, that--

(i) The Offeror and/or any of its Principals--

(A) Are __ are not __ presently debarred, suspended, proposed for debarment, or declared ineligible for the award of contracts by any Federal agency;

(B) Have __ have not __, within a three-year period preceding this offer, been convicted of or had a civil judgment rendered against

them for: commission of fraud or a criminal offense in connection with obtaining, attempting to obtain, or performing a public (Federal, state, or local) contract or subcontract; violation of Federal or state antitrust statutes relating to the submission of offers; or commission of embezzlement, theft, forgery, bribery, falsification or destruction of records, making false statements, tax evasion, or receiving stolen property; and

(C) Are __ are not __ presently indicted for, or otherwise criminally or civilly charged by a governmental entity with, commission of any of the offenses enumerated in paragraph (a)(1)(i)(B) of this provision.

(ii) The Offeror has __ has not __, within a three-year period preceding this offer, had one or more contracts terminated for default by any Federal agency.

(2) "Principals," for the purposes of this certification, means officers; directors; owners; partners; and, persons having primary management or supervisory responsibilities within a business entity (*e.g.*, general manager; plant manager; head of a subsidiary, division, or business segment, and similar positions).

This Certification Concerns a Matter Within the Jurisdiction of an Agency of the United States and the Making of a False, Fictitious, or Fraudulent Certification May Render the Maker Subject to Prosecution Under Section 1001, Title 18, United States Code.

(b) The Offeror shall provide immediate written notice to the Contracting Officer if, at any time prior to contract award, the Offeror learns that its certification was erroneous when submitted or has become erroneous by reason of changed circumstances.

(c) A certification that any of the items in paragraph (a) of this provision exists will not necessarily result in withholding of an award under this solicitation. However, the certification will be considered in connection with a determination of the Offeror's responsibility. Failure of the Offeror to furnish a certification or provide such additional information as requested by the Contracting Officer may render the Offeror nonresponsible.

(d) Nothing contained in the foregoing shall be construed to require establishment of a system of records in order to render, in good faith, the certification required by paragraph (a) of this provision. The knowledge and information of an Offeror is not required to exceed that which is normally possessed by a prudent person in the ordinary course of business dealings.

(e) The certification in paragraph (a) of this provision is a material representation of fact upon which reliance was placed when making award. If it is later determined that the Offeror knowingly rendered an erroneous certification, in addition to other remedies available to the Government, the Contracting Officer may terminate the contract resulting from this solicitation for default.

(End of provision)

52.225-18

Place of Manufacture (Sept 2006)

(a) *Definitions*. As used in this clause--

"Manufactured end product" means any end product in Federal Supply Classes (FSC) 1000-9999, except--

(1) FSC 5510, Lumber and Related Basic Wood Materials;

(2) Federal Supply Group (FSG) 87, Agricultural Supplies;

(3) FSG 88, Live Animals;

(4) FSG 89, Food and Related Consumables;

(5) FSC 9410, Crude Grades of Plant Materials;

(6) FSC 9430, Miscellaneous Crude Animal Products, Inedible;

(7) FSC 9440, Miscellaneous Crude Agricultural and Forestry Products;

(8) FSC 9610, Ores;

(9) FSC 9620, Minerals, Natural and Synthetic; and

(10) FSC 9630, Additive Metal Materials.

"Place of manufacture" means the place where an end product is assembled out of components, or otherwise made or processed from

raw materials into the finished product that is to be provided to the Government. If a product is disassembled and reassembled, the place of reassembly is not the place of manufacture.

(b) For statistical purposes only, the offeror shall indicate whether the place of manufacture of the end products it expects to provide in response to this solicitation is predominantly--

(1) __ In the United States (Check this box if the total anticipated price of offered end products manufactured in the United States exceeds the total anticipated price of offered end products manufactured outside the United States); or

(2) __ Outside the United States.

(End of provision)

AOC52.204-2

Data Universal Numbering System (Duns) Number (Jun 2004)

(a) The offeror shall enter, in the space provided below, the DUNS number that identifies the offeror s name and address exactly as stated in the offer. The DUNS number is a nine-digit number assigned by Dun and Bradstreet Information Services.

(b) If the offeror does not have a DUNS number, it should contract Dun and Bradstreet directly to obtain one. A DUNS number will be provided immediately by telephone at no charge to the offeror. For information on obtaining a DUNS number, the offeror, if located within the United States, should call Dun and Bradstreet at 1-800-333-0505. The offeror should be prepared to provide the following information:

(1) Company name,

(2) Company address;

(3) Company telephone number;

(4) Line of business;

(5) Chief executive officer/key manager;

(6) Date the company was started;

(7) Number of people employed by the company; and

(8) Company affiliation.

(c) Offerors located outside the United States may obtain the location and phone number of the local Dun and Bradstreet Information Services office from the Internet home page at http://www.customerservice@dnb.com. If an offeror is unable to locate a local service center, it may send an e-mail to Dun and Bradstreet at globalinfo@mail.dnb.com.

(d) Enter DUNS number:_____.

(End of provision)

AOC52.204-3

Representations and Certifications (Nov 2004)

The offeror shall properly execute and submit with its offer the Representations and Certifications contained herein. Insert information in spaces provided as applicable.

(End of provision)

AOC52.215-8

Authorized Negotiators (Jun 2004)

The offeror represents that following persons are authorized to negotiate on its behalf with the Government in connection with this Request for Proposal:

Name: _____ Title: _____

Telephone: _____ E-Mail: _____

Name: _____ Title: _____

Telephone: _____ E-Mail: _____

Name: _____ Title: _____

Telephone: _____ E-Mail: _____

(End of provision)

AOC52.219-2

AOC52.219-2 Small Business Representations and Certifications (Nov 2007)

(a) If this procurement exceeds $100,000 the North American Industry Classification System (NAICS) code for this procurement is _____ and the small business size standard is _____ (if this requirement is for manufacturing or trade) *or* $ _____ (if this requirement is for services, including construction).

(b) The Architect of the Capitol maintains information on the types of contractors to whom contract and order awards are made in order to monitor the success of our efforts to improve contracting opportunities in the small business community. Therefore, each offeror shall complete the information regarding the classification of its type of entity.

(c) Definitions. As used in this provision --
"Small business" means a business concern that is organized for profit, has a place of business in the United States, *and* does not exceed the size standard for its industry. It may be a sole proprietorship, partnership, corporation, or any other legal entity.
"Service-disabled veteran-owned small business concern" means a small business concern (1) not less than 51 percent of which is owned by one or more service-disabled veterans or, in the case of any publicly owned business, not less than 51 percent of the stock of which is owned by one or more service-disabled veterans; and (2) the management and daily business operations of which are controlled by one or more service-disabled veterans or, in the case of a service-disabled veteran with permanent and severe disability, the spouse or permanent caregiver of such veteran.
"Veteran-owned small business concern" means a small business concern (1) not less than 51 percent of which is owned by one or more veterans (as defined at 38 U.S.C. 101(2)) or, in the case of any publicly owned business, not less than 51 percent of the stock of which is owned by one or more veterans; and (2) the management and daily business operations of which are controlled by one or more veterans.
"Women-owned small business concern" means a small business concern (1) that is at least 51 percent owned by one or more women or, in the case of any publicly owned business, at least 51 percent of the stock of which is owned by one or more women; and (2) whose management and daily business operations are controlled by one or more women.
"Large business concern" is an entity that is organized for profit, has a place of business in the United States, *and* exceeds the size standard for its industry.
"Nonprofit organization" is an entity that is not organized for profit, e.g., the American Red Cross, universities, and foundations.
"Foreign contractor" is an entity organized for profit that is not in the United States.

(d) Small disadvantaged business, women-owned small business, veteran-owned small business, service-disabled veteran-owned small business, and HUBZone small business concerns are subcategories of small business. Small disadvanted business and HUBZone small business concerns require certification by the U.S. Small Business Administration. Additional information is available at http://www.sba.gov.

(e) For entities organized for profit, the size standards for each industry can be found at http://www.sba.gov/gopher/Government-Contracting/Size/. A business is large if the number of employees or revenue amount exceeds that shown in the applicable industry.

(f) Indicate below the information that best describes your organization and check all categories that apply. For example, if your organization is women-owned *and* veteran-owned small business, then check "Small Business", Women-owned small business", and "Veteran-owned small business".

_____ Nonprofit organization (do not check any other box).
_____ Large business (do not check any other box).
_____ Foreign contractor (do not check any other box).
_____ State/local/Federal government agency (do not check any other box).
_____ Small business (see 13 CFR Part 121).
_____ HUBZone small business (see 13 CFR Part 126).
_____ Small disadvantaged business (see 13 CFR 124.1002).
_____ Service-disabled veteran-owned small business (see 38 U.S.C. 101(2) and 38 U.S.C. 101(16)).
_____ Veteran-owned small business (see 38 U.S.C. 101(2)).
_____ Women-owned small business.

(End of provision).

52.223-1

Biobased Product Certification (Dec 2007)

As required by the Farm Security and Rural Investment Act of 2002 and the Energy Policy Act of 2005 (7 U.S.C. 8102(c)(3)), the offeror certifies, by signing this offer, that biobased products (within categories of products listed by the United States Department of Agriculture in 7 CFR part 2902, subpart B) to be used or delivered in the performance of the contract, other than biobased products that are not purchased by the offeror as a direct result of this contract, will comply with the applicable specifications or other contractual requirements.

(End of provision)

Section L - Instructions, Conditions and Notices to Offerors

52.216-1

Type of Contract (Apr 1984)

The Government contemplates award of a firm fixed-price contract resulting from this solicitation.

(End of provision)

AOC52.204-5

AOC52.204-5 Registration In The Central Contractor Registration (CCR) (Nov 2007)

(a) The Architect of the Capitol anticipates that in the future the agency's contractors may have to register in the CCR database. This is the primary vendor database for the Executive Branch of the U.S. Federal Government. CCR collects, validates, stores, and disseminates data in support of agency acquisition missions.

(b) CCR requires vendors to complete a one-time registration to provide basic information relevant to procurement and financial transactions. Vendors must update or renew their registration at least once per year to mainatain an active status. CCR validates the vendor information and electronically shares the secure and encrypted data with the Federal agencies' finance offices to facilitate paperless payments through electronic funds transfer (EFT).

(c) The AOC is now encouraging all vendors to register in the CCR if they have not already done so. Vendors can register on line at http://ccr.gov. This internet site contains all pertinent information for egistrration as well as provides contact points for help when registering.

(End of provision)

AOC52.206-1

AOC52.206-1 Procurement Authority for the Architect of the Capitol (Sep 2007)

The authority for all purchase orders and contracts awarded by the Architect of the Capitol is 41 U.S.C. 5, 41 U.S.C. 6a-1, and 41 U.S.C. 6a-2, as amended by Public Laws 107-68, 108-7, and 108-83.

(End of Provision)

AOC52.215-1

Instructions to Offerors (Jul 2007)

(a) Definitions. As used in this provision --

Proposal modification is a change made to a proposal before the solicitation s closing date and time, or made in response to an amendment, or made to correct a mistake at any time before award.

Proposal revision is a change to a proposal made after the solicitation closing date, at the request of or as allowed by a Contracting Officer as the result of negotiations.

Time, if stated as a number of days, is calculated using calendar days, unless otherwise specified, and will include Saturdays, Sundays, and legal holidays, including Presidential Inauguration Day. However, if the last day falls on a Saturday, Sunday, or legal holiday, including Presidential Inauguration Day, then the period shall include the next working day.

(b) Offerors are expected to examine the entire solicitation and all instructions. Failure to do so will be at the offeror s risk. Each offeror shall furnish the information required by the solicitation. The offeror will be held responsible for full knowledge of all

information contained therein.

(c) Packaging, transmission, and tracking of proposals. (1) Proposals, modifications, and revisions shall be enclosed, in the quantities specified elsewhere in this solicitation, in sealed envelopes. With each copy of the form entitled, "SOLICITATION, OFFER, AND AWARD", the offeror shall enclose the completed Schedule page; offer guarantee, if required; and Representations and Certifications. Address envelopes to: Architect of the Capitol, Procurement Division, Ford House Office Building, Attn: Shola Matthews-Aroloye, Room H2-263 Bid Room, Second and D Streets, S.W., Washington, DC 20515. Offeror shall write Bid Documents Enclosed, H2-263 Bid Room, and write the solicitation number, time and date for receipt of offers on the exterior of the package on the same side as the address. Telegraphic or facsimile proposals and modifications will not be considered.

(2) Current security requirements established by the U.S. Capitol Police to screen mail being delivered to the U.S. Capitol Complex of buildings preclude the use of U. S. Postal Service by offerors to deliver their proposals submitted in response to this solicitation. In addition, because all packages must be screened for security purposes at a central location prior to their delivery, the Architect of the Capitol cannot accept packages containing offers hand carried directly to the Bid Room address within the Ford House Office Building, or any other location in the U.S. Capitol Complex of buildings. See Notice for Delivery on the front of the solicitation.

(3) To assist in tracking of proposals, offerors are requested to fax a copy of their signed Solicitation, Offer and Award form as well as a copy of the FEDEX or UPS receipt to [Contract Specialist's name] to [(202) 225-3221] at the time of the issuance of their proposal.

(4) The only acceptable method by which offerors can deliver their responses to this solicitation shall be via Federal Express (FEDEX) or United Parcel Service (UPS). Offers submitted via any other method will be rejected. OFFERORS - DO NOT MAIL YOUR OFFER BY REGULAR U.S. MAIL. See notice attached to this solicitation for special instructions.

(d) Submission, modification, revision, and withdrawal of proposals. (1) Offerors are responsible for submitting proposals and any modifications or revisions so as to reach the Government office designated in the solicitation by the time specified in the solicitation. If no time is specified in the solicitation, the time for receipt is 4:30 p.m. local time, for the designated Government office on the date that the proposal or revision is due.

(2) Any proposal, modification, or revision received at the Government office designated in the solicitation after the exact time specified for receipt of offers is late and will not be considered unless it is received before award is made, the Contracting Officer determines that accepting the late offer would no unduly delay the acquisition, and-

(i) If it was transmitted through an electronic commerce method authorized by the solicitation, it was received at the initial point of entry to the Government infrastructure not later than 5:00 p.m. one working day prior to the date specified for receipt of proposals;

(ii) There is acceptable evidence to establish that it was received at the Government installation designated for receipt of proposals and was under the Government s control prior to the time set for receipt of proposals; or

(iii) It is the only proposal received.

(3) However, a late modification of an otherwise successful proposal that makes its terms more favorable to the Government, will be considered at any time it is received and may be accepted.

(4) Acceptable evidence to establish the date of receipt at the Government installation includes the time/date stamp of that installation on the offer wrapper, other documentary evidence of receipt maintained by the installation, or oral testimony or statements of Government personnel.

(5) If an emergency or unanticipated event interrupts normal Government processes so that offers cannot be received at the Government office designated for receipt of proposals by the exact time specified in the solicitation and urgent Government requirements preclude amendment of the solicitation, the time specified for receipt of proposals will be deemed to be extended to the same time of day specified in the solicitation on the first work day on which normal Government processes resume.

(6) Proposals may be withdrawn by written notice received at any time before award. Proposals may be withdrawn in person by an offeror or an authorized representative if the identity of the person requesting withdrawal is established and the person signs a receipt for the proposal before award.

(End of provision)

AOC52.215-2

Interpretations and Amendments (Jun 2004)

(a) Any prospective offeror desiring an explanation or interpretation of the solicitation, drawings, specifications, etc., must request it in writing no later than fourteen calendar days prior to the date established for receipt of offers. Oral explanations or instructions given

before the award of a contract will not be binding.

(b) Prospective offerors shall request the Contracting Officer, in writing, via FAX or e-mail for an interpretation or correction of any ambiguity, inconsistency, or error in the contract documents which they may discover or which should have been discovered by a reasonably prudent offeror. Such requests or objections to materials or methods of construction shown or specified shall be directed to the attention of the Contracting Officer at least fifteen (15) calendar days prior to the date specified for receipt of proposals. Written requests shall be transmitted via e-mail to [email address] or via facsimile to [fax number].

(c) Any interpretations or corrections, as well as any additional modifications the Contracting Officer may desire to include, will be in the form of amendments, in writing, which will be sent on the same date to all offerors if that information is necessary in submitting offers or if the lack of it would be prejudicial to other prospective offerors and shall become a part of any subsequent contract. The Contracting Officer reserves the right to answer only such questions as have, in his opinion, a definite bearing upon the proposals to be submitted.

(1) Offerors shall acknowledge the receipt of all amendments to the solicitation by:

(i) Signing and returning the amendment;

(ii) Identifying the amendment number and date in the space provided for this purpose on the form for submitting a offer;

(iii) Letter or telegram; or

(iv) Facsimile, if facsimile offers are authorized in the solicitation.

(2) The Government must receive the acknowledgment by the time and at the place specified for receipt of offers.

(d) Requests for oral interpretations or any other interpretations not made by amendments will not be accepted, and any information that may possibly be gained by offerors in that manner is gratuitous and not binding.

(e) If this solicitation is amended, all terms and conditions that are not amended remain unchanged.

(End of provision)

AOC52.215-3

Restriction on Disclosure and Use of Data (Jun 2004)

Offerors that include in their proposals data that they do not want disclosed to the public for any purpose, or used by the Government except for evaluation purposes, shall

(a) Mark the title page with the following legend:
This proposal includes data that shall not be disclosed outside the Government and shall not be duplicated, used, or disclosed--in whole or in part--for any purpose other than to evaluate this proposal. If, however, a contract is awarded to this offeror as a result of--or in connection with--the submission of this data, the Government shall have the right to duplicate, use, or disclose the data to the extent provided in the resulting contract. This restriction does not limit the Government s right to use information contained in this data if it is obtained from another source without restriction. The data subject to this restriction are contained in sheets (insert numbers or other identification of sheets) ; and

(b) Mark each sheet of data it wishes to restrict with the following legend:
Use or disclosure of data contained on this sheet is subject to the restriction on the title page of this proposal.

(End of provision)

AOC52.215-6

Preparation of Proposals (May 2007)

(a) Offerors are expected to examine the drawings, if any, specifications, Schedule, and all instructions. Failure to do so will be at the Offerors risk.

(b) Each offeror shall furnish the information required by the solicitation. The offerors shall sign the offer on Page 1 (SOLICITATION, OFFER AND AWARD) in block 18 and return Sections A, B, and K of this solicitation package. Erasures or other changes must be initialed by the person signing the offer. Offers signed by an agent shall be accompanied by evidence of that agent's authority, unless that evidence has been previously furnished to the issuing office.

(c) For each item offered, offers shall

(1) Show the unit price, if required, including, unless otherwise specified, packaging, packing, and preservation; and

(2) Enter the extended price for the quantity of each item offer in the "Amount" column of the Schedule.

(d) In case of discrepancy between a unit price and an extended price, the unit price will be presumed to be correct, subject, however, to correction to the same extent and in the same manner as any other mistake.

(e) Offers for supplies or services other than those specified will not be considered unless authorized by the solicitation.

(End of provision)

AOC52.215-9

Failure to Submit Offer (Jun 2004)

Recipients of this solicitation not responding with a proposal should not return this solicitation, unless it specifies otherwise. Instead, they should advise the issuing office by letter, postcard, or established electronic commerce methods, whether they want to receive future solicitations for similar requirements. If a recipient does not submit a proposal and does not notify the issuing office that future solicitations are desired, the recipient s name will be removed from the applicable mailing list.

(End of provision)

52.252-1 Sec. L

52.252-1 SOLICITATION PROVISIONS INCORPORATED BY REFERENCE (FEB 1998)

This solicitation incorporates one or more solicitation provisions by reference, with the same force and effect as if they were given in full text. Upon request, the Contracting Officer will make their full text available. The offeror is cautioned that the listed provisions may include blocks that must be completed by the offeror and submitted with its quotation or offer. In lieu of submitting the full text of those provisions, the offeror may identify the provision by paragraph identifier and provide the appropriate information with its quotation or offer. Also, the full text of a solicitation provision may be accessed electronically at this/these address(es):

www.gsa.gov or www.arnet.gov

(End of provision)

Clauses By Reference

Clause	Title	Date
52.211-6	Brand Name or Equal	11/08/2006

Section M - Evaluation Factors for Award

AOC52.215-4

Contract Award (Jun 2004)

(a) The Government will evaluate offers in response to this solicitation without discussions and will award a contract to the responsible offeror whose offer, conforming to the solicitation, will be most advantageous to the Government considering only price and the price-related factors specified elsewhere in the solicitation. Therefore, the offeror s initial proposal should contain the offeror s best terms from a price standpoint. The Government reserves the right to conduct discussions.

(b) The Government may

(1) Reject any or all offers;

(2) Accept other than the lowest offer; and

(3) Waive informalities or minor irregularities in offers received.

(c) The Government may accept any item or combination of items, unless doing so is precluded by a restrictive limitation in the solicitation or the offer.

(d) A written award or acceptance of offer mailed or otherwise furnished to the successful offeror within the time for acceptance specified in the offer shall result in a binding contract without further action by either party. Before the offer's specified expiration time, the Government may accept an offer (or part of an offer as provided in Paragraph (c) of this clause), whether or not there are negotiations after its receipt, unless a written notice of withdrawal is received before award. Negotiations conducted after receipt of an offer do not constitute a rejection or counteroffer by the Government.

(e) Neither financial data submitted with an offer, nor representations concerning facilities or financing, will form a part of the resulting contract. However, if the resulting contract contains a clause providing for price reduction for defective cost or pricing data, the contract price will be subject to reduction if cost or pricing data furnished is incomplete, inaccurate, or not current.

(f) The Government may determine that an offer is unacceptable if the prices proposed are materially unbalanced between line items or sub line items. Unbalanced pricing exists when, despite an acceptable total evaluated price, the price of one or more contract line items is significantly overstated or understated as indicated by the application of cost or price analysis techniques. A proposal may be rejected if the Contracting Officer determines that the lack of balance poses an unacceptable risk to the Government.

(End of provision)

52.252-1 Sec. M

52.252-1 SOLICITATION PROVISIONS INCORPORATED BY REFERENCE (FEB 1998)

This solicitation incorporates one or more solicitation provisions by reference, with the same force and effect as if they were given in full text. Upon request, the Contracting Officer will make their full text available. The offeror is cautioned that the listed provisions may include blocks that must be completed by the offeror and submitted with its quotation or offer. In lieu of submitting the full text of those provisions, the offeror may identify the provision by paragraph identifier and provide the appropriate information with its quotation or offer. Also, the full text of a solicitation provision may be accessed electronically at this/these address(es):

www.gsa.gov or www.arnet.gov

(End of provision)

Clauses By Reference

Clause	Title	Date
52.217-5	Evaluation Of Options	11/08/2006